ART FILM - fab

REVISIONS			
REV	DESCRIPTION	DATE	APPROVED
01	ALPHA RELEASE	07/26/16	AARA
02	CERTIFICATION DETAILS ADDED	07/26/16	AARA
03	LOGO UPDATED	07/14/17	AARA
04	SOLDER MASK COLOR CHANGED TO RED	08/28/17	AARA
05	TEST POINTS UPDATED	10/25/17	AARA

Avoid Rat bite,Etch,Logo,any Label near Antenna
on both Top & Bottom layer

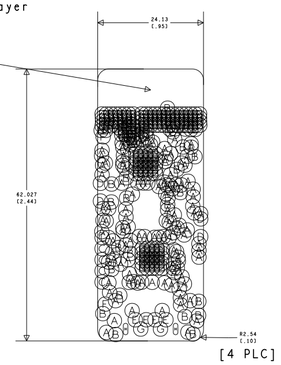

[4 PLC]

DRILL CHART: TOP to BOTTOM				
ALL UNITS ARE IN INCHES				
FIGURE	SIZE	TOLERANCE	PLATED	QTY
Ⓐ	0.0080	+0.0030/-0.0030	PLATED	118
Ⓑ	0.0100	+0.0030/-0.0030	PLATED	183
Ⓒ	0.0130	+0.0030/-0.0030	PLATED	5
Ⓓ	0.0240	+0.0030/-0.0030	PLATED	4
Ⓔ	0.0400	+0.0030/-0.0030	PLATED	4
Ⓕ	0.0430	+0.0030/-0.0030	PLATED	2
Ⓖ	0.0492	+0.0020/-0.0020	NON-PLATED	2
Ⓗ	0.1024x0.0413	+0.0030/-0.0030	PLATED	2

NOTES:(UNLESS OTHERWISE SPECIFIED)

1. RoHS COMPLIANT CERTIFICATION OR MATERIAL DECLARATION REQUIRED.
2. MATERIAL:
   A. IS410 OR EQUIVALENT. MATERIAL MUST CONFORM TO UL94V-0.
   B. REFER TO AS MENTIONED IN CROSS SECTION AREA IN THIS DOCUMENT.
   C. OVERALL METAL TO METAL THICKNESS AS SPECIFIED IN THE CROSS SECTION DRAWING IN THE DOCUMENT.
   D. FABRICATOR TO ENSURE THAT THERE ARE NO CHANGES TO THE MATERIALS LIKE LAMINATE,PREPEG, SOLDERMASK INK AND LEGEND PRINITING FROM THE SAMPLE SUPPLIES TO SUBSEQUENT BULK SUPPLIES.
3. DRILLING:
   A. DIAMETERS IN DRILL TABLE ARE FINISHED HOLE SIZES +/-.003 tol. UNLESS OTHERWISE SPECIFIED IN DRILL TABLE.
   B. TEARDROP ALLOWED ON ENTRY OF VIA ON EVERY TRACE LAYER.
4. PLATING:
   COPPER PLATING IN THRU-HOLES .001 min.
5. ETCHING:
   A. COPPER THICKNESS >1oz,CARE MUST BE TAKEN TO AVOID OVER ETCHING ON PADS
6. MARKING:
   A. SILKSCREEN IN WHITE NON-CONDUCTIVE EPOXY INK ON PRIMARY SIDE OF THE BOARD OR BOTH SIDES IF APPLICABLE.
   B. FABRICATOR TO ENSURE THE CLARITY OF LEGEND AS THIS IS A IMPORTANT FACTOR FOR CYPRESS KITS HENCE CARE HAS TO BE TAKEN TO ENSURE THERE ARE NO BROKEN CHARACTERS IN SILK SCREEN APPLY SOLDERMASK APPROPRIATLY TO COVER THE VIA'S
   C. FABRICATOR TO PLACE DATE CODE, LOGO AND RoHS COMPILANT SYMBOL IN SILKSCREEN ON SECONDARY SIDE.
7. FINAL FABRICATION:
   A. SOLDERMASK PRIMARY AND SECONDARY SIDE OF BOARD USING LIQUID PHOTOIMAGABLE MASK MATERIAL OVER BARE COPPER. PER IPC-SM-840. MASK ARTWORKS PROVIDED ARE 1:1. SOLDERMASK COLOR **RED**
   B. SOLDRMASK THICKNESS TO BE MAINTAINED UNIFORMLY AS PER IPC-SM-840.THE VARIATION IN THE SOLDER THICKNESS SHALL BE AT THE MINIMUM FROM PANEL TO PANEL AND PANEL AND LOT TO LOT TO ENSURE UNIFORMITY IN COLOUR AND COVERAGE.
8. FINISH:
   A. SHALL BE IMMERSION GOLD(ENIG).
   B. NICKEL THICKNESS: 0.00010-0.00020in.
   C. GOLD THICKNESS: 0.0000030-0.000010in
9. BOARDS SHALL BE PURCHASED FROM UL RECOGNIZED VENDORS ONLY. FLAMMABILITY RATING (94-V0).
10. MANUFACTURE BOARD TO BE IN ACCORDANCE WITH PERFORMANCE STANDARD IPC-6011/6012 CLASS 2 BOARD TO BE INSPECTED PER IPC-600-A CLASS 2.
11. MAXIMUM WRAP OR TWIST SHALL NOT EXCEED .007 in/in.
12. TESTING:
   A. FABRICATOR TO ADD TEST STRUCTURES OR CUPONS AS NEEDED.
   B. T-LINE IMPEDANCE TO BE TESTED OR GUARANTEE WITHIN 10% IF SPECIFIED IN THE CROSS SECTION. TOLERANCE TO BE +/-10% UNLESS OTHERWISE SPECIFIED.

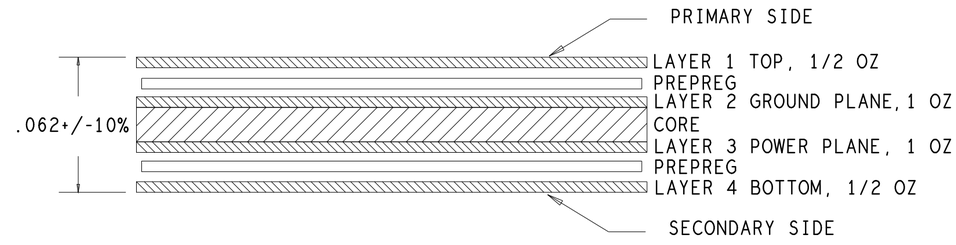

NOTE: 9 MIL WIDTH & 16 MIL SPACING TRACES ON LAYER 4 IS DIFFERENTIAL IMPEDANCE CONTROLLED TO 90 OHMS +/- 10% TESTED

UNLESS OTHERWISE SPECIFIED	SIGNATURES		DATE
DIMENSIONS ARE IN INCHES	DRAWN	PLTO	10/25/17
TOLERANCES ON; ANGLES +/- 2°	CHECKED	AARA	10/25/17
2 PL DECIMALS +/- .010	ENGRG	AARA	10/25/17
3 PL DECIMALS +/- .005	ISSUED		
THIRD ANGLE PROJECTIONS			

CYPRESS PROPRIETARY
THIS DOCUMENT CONTAINS CONFIDENTAL, PROPRIETARY INFORMATION THAT IS CYPRESS SEMICONDUCTOR PROPERTY. DO NOT DISCLOSE TO OR DUPLICATE FOR OTHERS EXCEPT AS AUTHORIZED BY CYPRESS.

CYPRESS EMBEDDED IN TOMORROW
198 CHAMPION COURT
SAN JOSE, CA 95134
(408) 943-2600

FABRICATION DRAWING
CY5677 CySmart BLE 4.2 USB Dongle

SIZE	FSCM NO	DWG NO	REV
C		610-60300-01	05

SCALE: 1/1 SHEET: 1 OF 1

ART FILM - fab

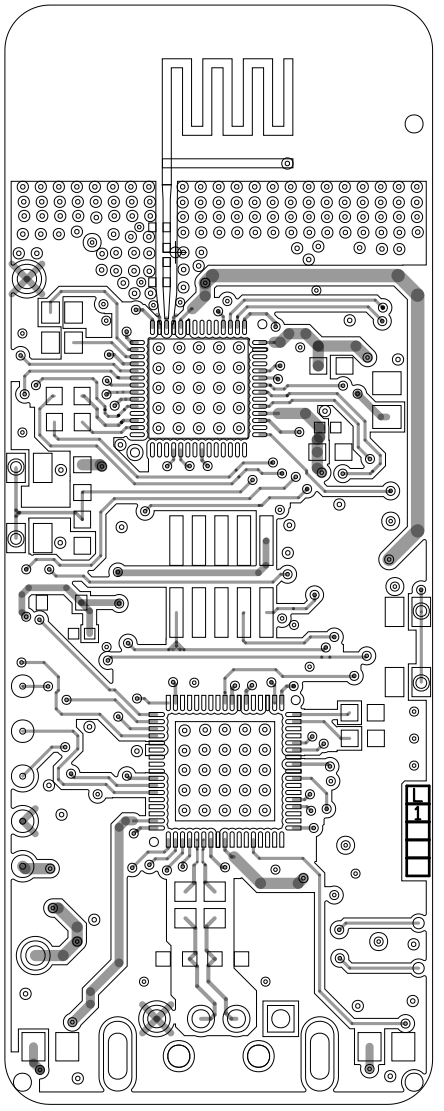

600-60326-01 REV05 PRIMARY SIDE

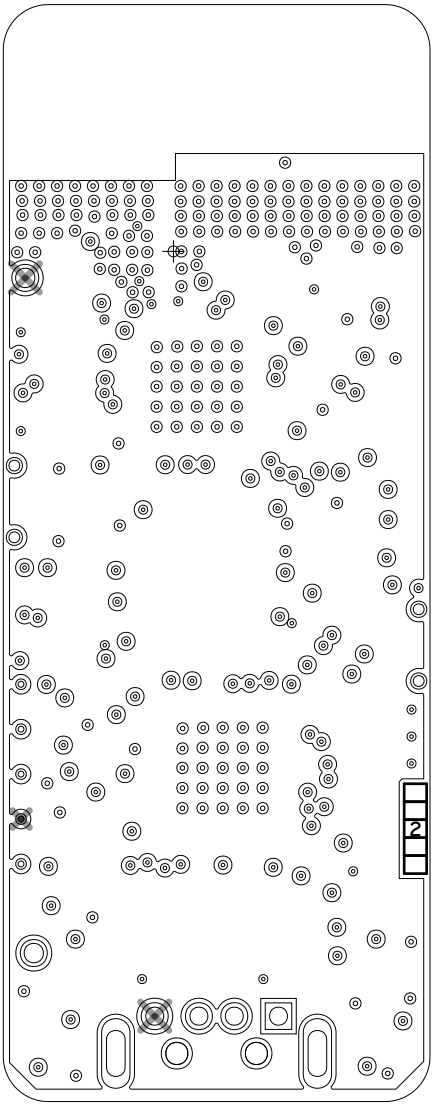

600-60326-01 REV05 GND LAYER

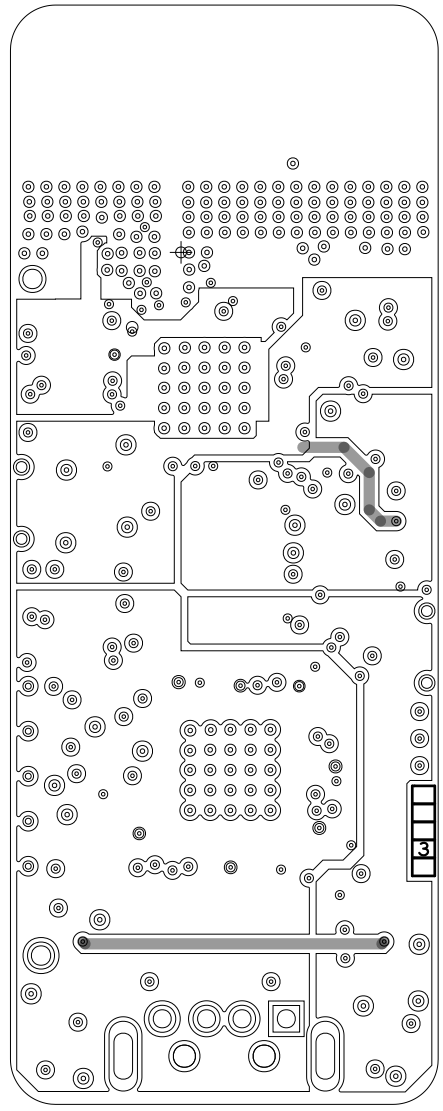

600-60326-01 REV05 POWER LAYER

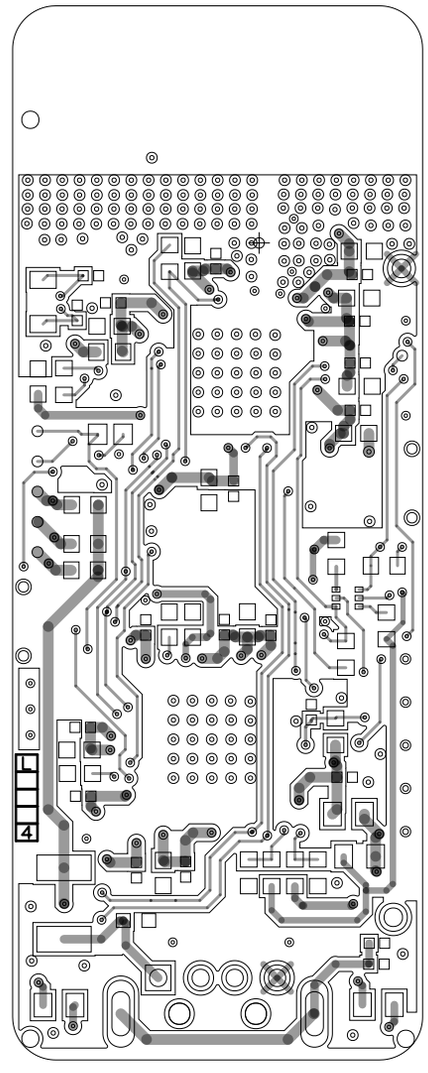

600-60326-01 REV05 SECONDARY SIDE

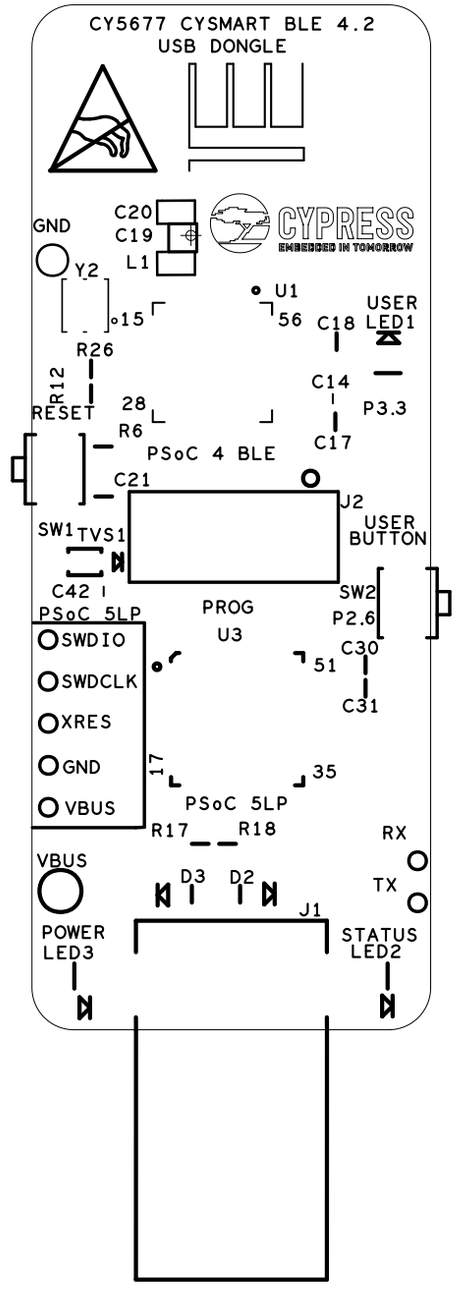

600-60326-01 REV05 PRIMARY SILKSCREEN

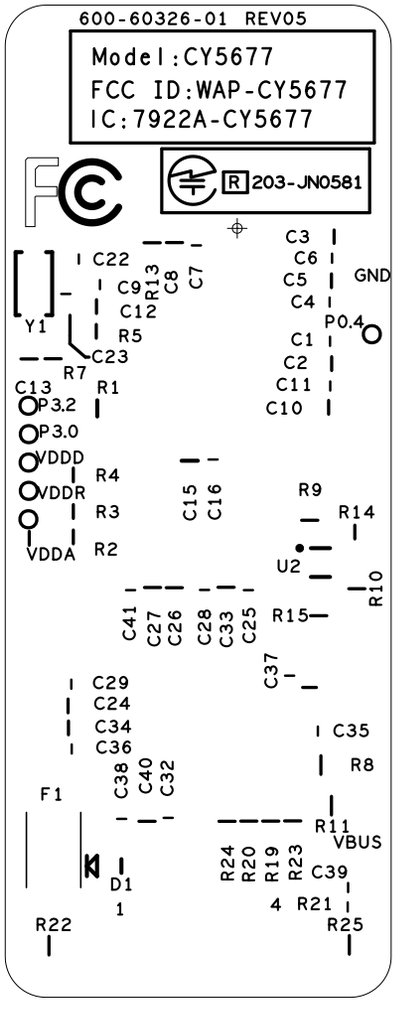

600-60326-01 REV05 SECONDARY SILKSCREEN